MARS

Non-Lethal Threat Engagement Payload

Mars is a remotely operated, Non-Lethal Threat Engagement Payload, designed to effectively Hail, Deter and Disrupt a potential threat in excess of 1500 mt.

The use of a system like Mars will help identifying a potential threat at a longer range and to avoid the use of lethal force.

Mars is specifically designed for installation on remote weapon stations or on fixed security installations pan and tilt systems and integrates in a rugged and compact assembly:

- a 150 dB SPL(A) directional speaker
- a field proven 5W dimmable green laser dazzler
- a powerful 12 million candelas white light
- and a Laser Range Finder

An all-weather rugged enclosure with a remotely operated protective front panel, safeguards sensors and effectors in harsh environment operations.
Mars' effectors can be used singularly or in combination with each other for greater effectiveness and can be customized to respond to specific customer requirements.

Mars Fields of Application

- Critical Infrastructure security
- Border and Immigration control
- Law Enforcement/Anti Riot/ Crowd Control
- Asset Self Defence

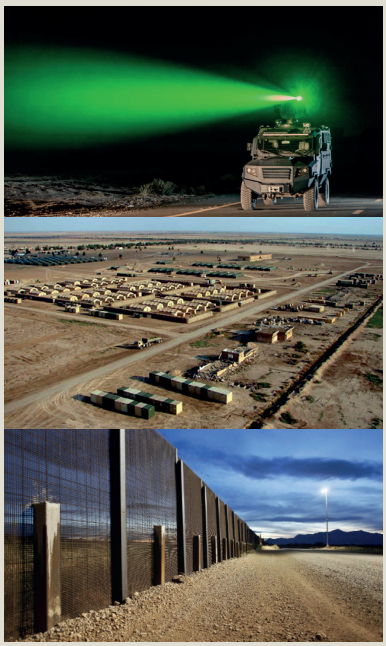

NOLTECH

MARS

Acoustic Emitter

Sound Pressure Level (SPL): 150 dB@1m A-weighted
Frequency response: 250-10,000 Hz
Beam Divergence: +/- 15°

Audio signals:

- **Voice** *(live via microphone or pre-defined messages stored in memory)*
- **Sound** *(pre-defined audio files, including uncomfortable sounds and alert messages)*

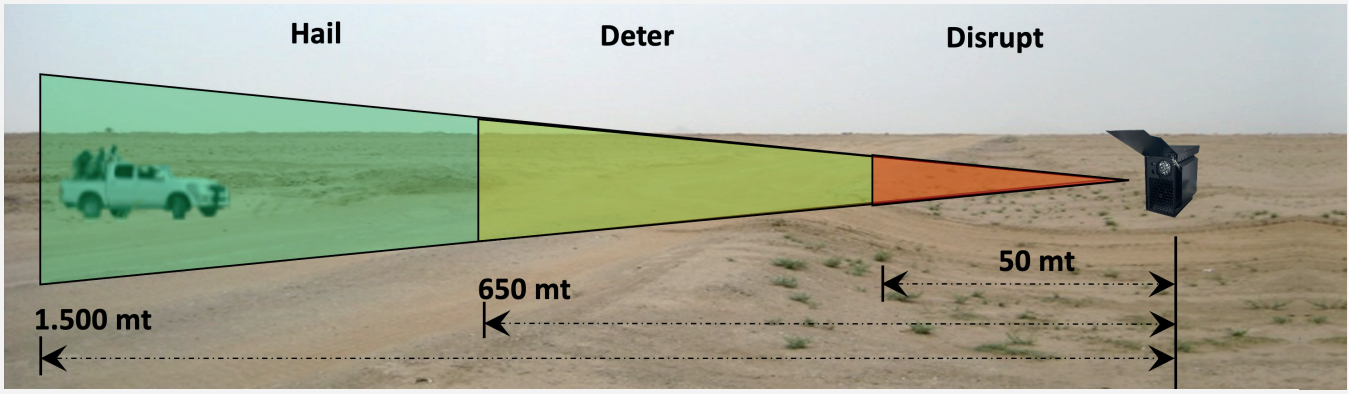

Laser Dazzler

Laser Power: 5,000 mW
Wavelength: 520 nm
Divergence: 5-15 mrad
Type of Emission: continuous or strobe mode (11 Hz)

Search Light

Output: 12 Mcd
Type: Xenon
Beam: remotely controlled
Focus adj: from 1° Spot to 40° Flood

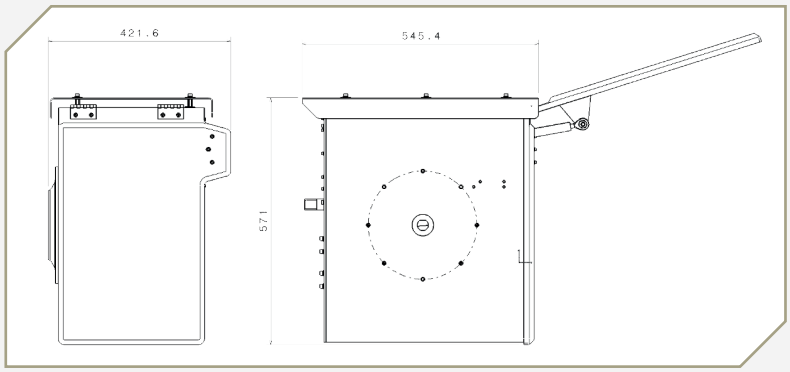

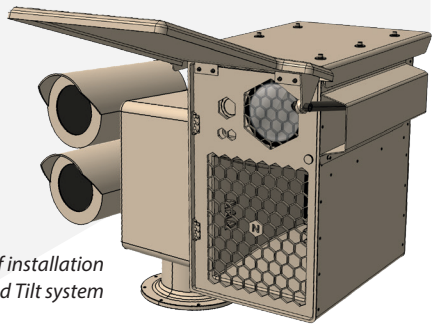

Example of installation on Pan and Tilt system

Dimensions

(mm): 571 (h) x 422 (w) x 545 (d)

Weight

(Kg): 40 (approx.)

Power Supply

12-48V DC
(24V DC Nominal)

Designed in accordance to Mil-Std 810 and IP65 requirements

NOLTECH

Noltech Srl
Via Campobello, 1 • 00071 Pomezia (RM) - ITALY • Office +39 06 811 79522
info@noltech.eu • **www.noltech.eu**